PEARL®

PA-7PROR

MODEL PA-7PROR™ TILE SAW

OWNER'S/OPERATOR'S MANUAL

RENTAL

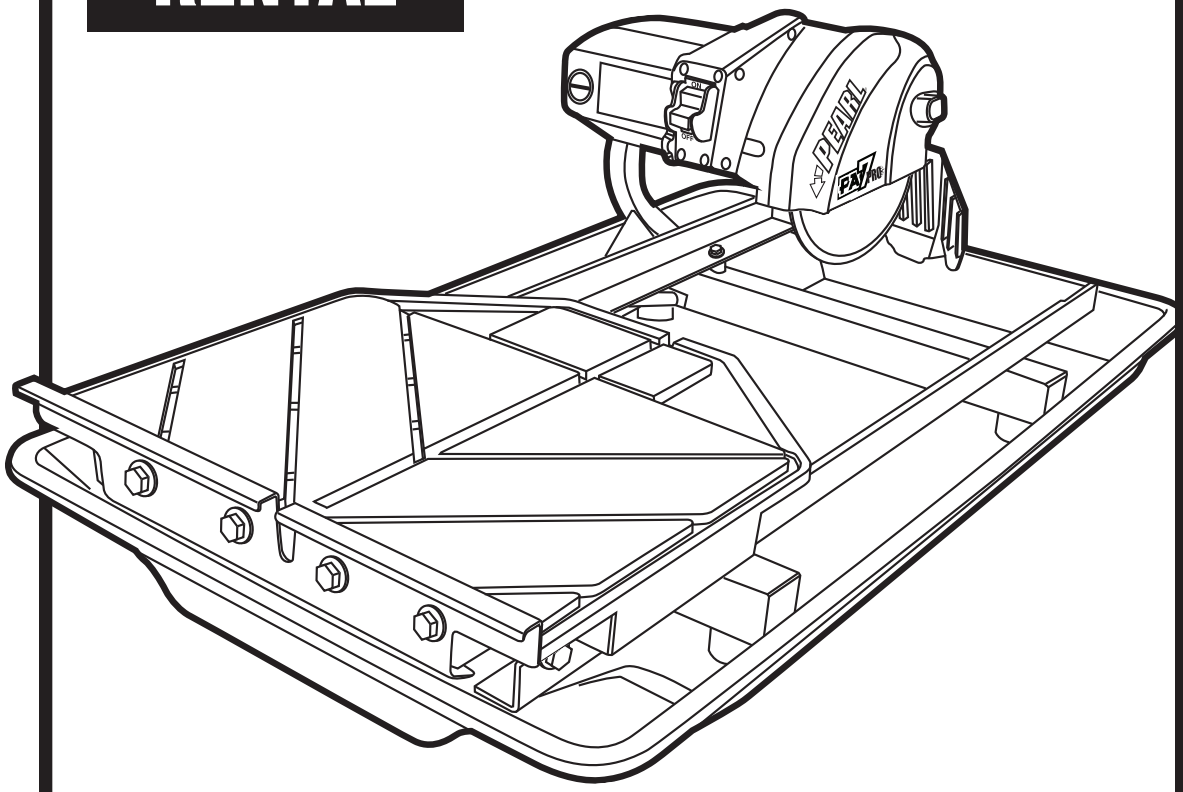

SERIAL NUMBER -

You should record the Serial Number of your Tile Saw on this Owner's/Operator's Manual and on the Warranty Card.
The Warranty Card must be sent back with all the required pertinent information for the warranty to take effect.

Caution! ***Read Safety and General Instructions carefully before using saw for the first time.***

REV. 4

PEARL ABRASIVE CO. PA-7PROR TILE SAW

TABLE OF CONTENTS

PAGE

I. GENERAL SAFETY RULES FOR ALL POWER TOOLS. 3

II. SYMBOLS 4

III. FEATURES 5

IV. SPECIFICATIONS 5

V. UNPACKING 6

VI. INSTALLATION AND OPERATION 6

VII. PROPER BLADE USE 8

VIII. SAFE OPERATING PRACTICES FOR TILE SAW 9

IX. CARE AND MAINTENANCE 12

X. ELECTRICAL MOTOR SPECIFICATIONS. 14

XI. REPLACEMENT PARTS LIST 15

XII. TROUBLESHOOTING 18

XIII. ACCESSORIES AND PARTS. 18

XIV. THE RIGHT BLADES DOES THE RIGHT JOB 19

XV. HOW TO ORDER PARTS 19

WARNING: Cancer and reproductive harm
www.P65Warnings.ca.gov

i. GENERAL SAFETY RULES FOR ALL POWER TOOLS

WARNING! ***Read all instructions. As with all machinery there are certain hazards involved with operation and use of the machine. The following basic safety precautions should be followed at all times to reduce the risk of fire, electric shock and serious personal injury to you or others. Keep these important operating instructions with this product.***

1. Know your power tool - read owner's/operator's manual carefully. Learn its applications and limitations as well as the specific potential hazards unique to this tool.

2. Keep guards in place - and in working order.

3. Ground all tools - if tools are equipped with three prong plug, it should be plugged into a three-hole electrical receptacle. If an adapter is used to accommodate a two-prong receptacle, the adapter lug must be attached to a known ground. Never remove the third prong.

4. Remove wrenches - Form a habit of checking to see that adjusting wrenches are removed from tool before turning it "on".

5. Keep work area clean. Cluttered areas and benches invite accidents.

6. Do not use in dangerous environment. Do not use power tools in damp or wet locations, or expose them to rain. Keep work area well lighted. Do not use tool in the presence of flammable liquids or gasses.

7. Keep children and visitors away. All children and visitors should be kept at a safe distance from work area.

8. Make workshop childproof with padlocks, master switches or by removing starter keys.

9. Do not force tool. It will do the job better and be safer at the rate for which it was designed.

10. Use right tool. Do not force tool or attachment to do a job for which it was not designed.

11. Wear proper apparel. Do not wear loose clothing, gloves, neckties, rings, bracelets or other jewelry that may get caught in moving parts. Non-slip footwear is recommended. Wear protective hair covering to contain long hair.

12. **Always use safety glasses.** Wear safety glasses (must comply with ANSI Z87.1) at all times. Everyday eyeglasses only have impact resistant lenses; they are not safety glasses. Use face or dust mask if cutting operation is dusty, and ear protectors (plugs or muffs) during extended periods of operation.

13. Do not overreach. Keep proper footing and balance at all times.

14. Maintain tools in top condition. Keep tools sharp and clean for best and safest performance. Follow instructions for lubricating and changing accessories. Inspect tool cords periodically and if damaged, have repaired by authorized service facility.

15. Disconnect tools. When not in use, before servicing, and when changing accessories, such as blades, bits, cutters.

16. Avoid accidental starting. Make sure switch is in "off" position before plugging in power cord.

17. Use recommended accessories only. Consult the owner's manual for recommended accessories. The use of improper accessories may cause risk of injury to persons.

18. Never stand on tool. Serious **injury** could occur if the tool is tipped or if the cutting tool is accidentally contacted.

19. Check Damaged Parts. Before further use of the tool, a guard or other part that is damaged should be carefully checked to ensure that it will operate properly and perform it's intended function. Check for alignment of moving parts, binding of moving parts, breakage of parts, mounting, and any other conditions that may affect it's operation. A guard or part that is damaged should be properly repaired or replaced.

20. Never leave tool running unattended. Turn power "off". Do not leave tool until it comes to a complete stop.

21. Extension cords. Make sure your extension cord is in good condition. When using an extension cord, be sure to use one heavy enough to carry the current your product will draw. An undersized cord will cause a drop in line voltage resulting in loss of power and overheating. Extension cord tables *(refer to page 21*) show the correct size to use depending on cord length and nameplate ampere rating. If in doubt, use the next heavier gage. The smaller the gage numbers the heavier the cord.
22. Do not abuse cord. Never carry tool by cord or pull it to disconnect from receptacle, Keep cord from heat, oil, and sharp edges.
23. Guard against electric shock. Prevent body contact with grounded surfaces. For example, pipes, radiators, ranges and refrigerator enclosures.
24. Outdoor use extension cords. When tool is used outdoors, use only extension cords intended for use outdoors and so marked.

25. Stay alert. Watch what you are doing. Use common sense. Do not operate tool when you are tired.
26. Drugs, alcohol, medication. Do not operate tool while under the influence of drugs, alcohol or any medication.
27. Store idle tool. When not in use, tool should be stored in a dry and locked place, out of reach of children.

⚠ WARNING! ***CALIFORNIA PROPOSITION 65:*** ***Sawing and drilling generates dust. Excessive airborne particles may cause irritation to eyes, skin and respiratory tract. To avoid breathing impairment always employ dust controls and protection suitable to the material being saw or drilled in accordance with OSHA (29 CFR Part 1910.1). Diamond blades improperly used are dangerous. Comply with ANSI Safety Code B7.1 and OSHA covering speed, safety guards, flanges, mounting procedures, general operating rules, handling, storage and general machine condition.***

ii. SYMBOLS

KEEP GUARD IN PLACE

DIAMOND BLADE

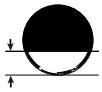
BLADE CUTTING DEPTH

ELECTRIC SWITCH OFF

ELECTRIC SWITCH ON

ELECTRICAL HAZARD

REMOVE TOOLS

PAY EXTREME ATTENTION

REPAIRS TO BE DONE

MACHINE HAZARD

FLAMMABLE

READ INSTRUCTIONS CAREFULLY

WARNING

FRAGILE

KEEP DRY

DO NOT STEP ON

WEAR HEARING PROTECTION

WEAR EYE PROTECTION

WEAR BREATHING PROTECTION

WEAR HARD HAT

WEAR PROTECTIVE CLOTHING

WEAR SAFETY SHOES

WELL VENTILATED

NO NON-WORKING PERSONNEL

iii. FEATURES

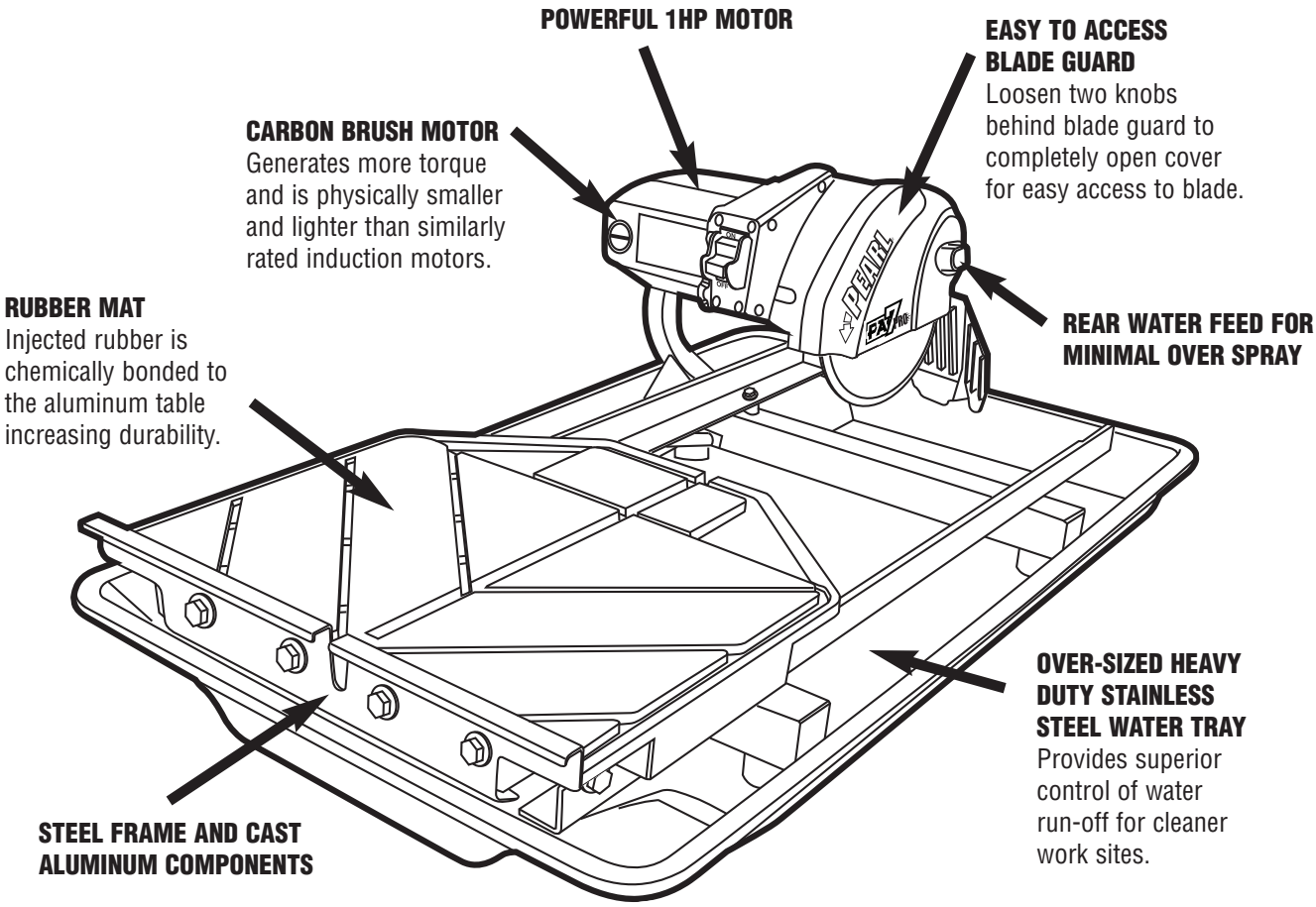

iv. SPECIFICATIONS

PA-7PROR TILE SAW

MOTOR	MAX. BLADE CAPACITY	CUTTING LENGTH	CUTTING DEPTH	WEIGHT	DIMENSIONS*
1 HP 115 v, 60 Hz, 6,000 rpm	7" Blade 5/8" arbor blade	20" rip cut, 14" diagonal cut	1.7"	42 lbs.	33" L x 19" W x 13" H

*Dimensions do not include extension tables and drip trays.

v. UNPACKING and SETTING UP

Open the container and carefully lift the saw by the foam packaging and place it on a flat, level working area. Be sure that you have the following items before you discard the container:

- Saw
- Stainless steel water tray
- 7" saw blade
- 45º/90º rip guide
- Universal wrench
- Water pump
- Owner's manual
- Drain plug

Proceed to the following section to complete the assembly of the saw:

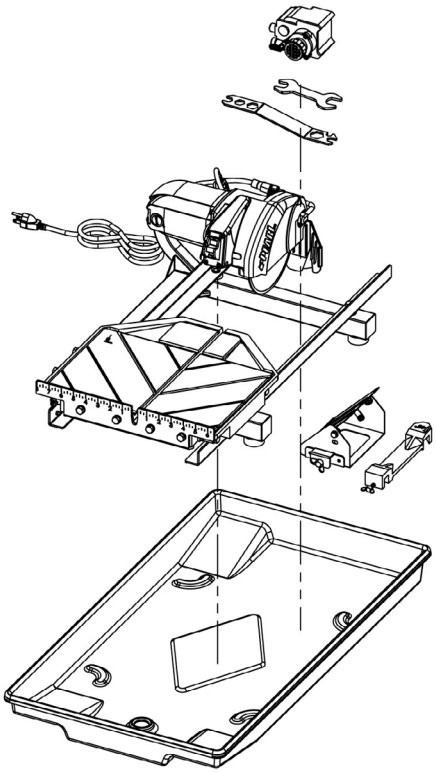

vi. INSTALLATION AND OPERATION

BLADE INSTALLATION

1. (See figure 1) Turn the two knobs on the inner blade guard counterclockwise until the guard is free.

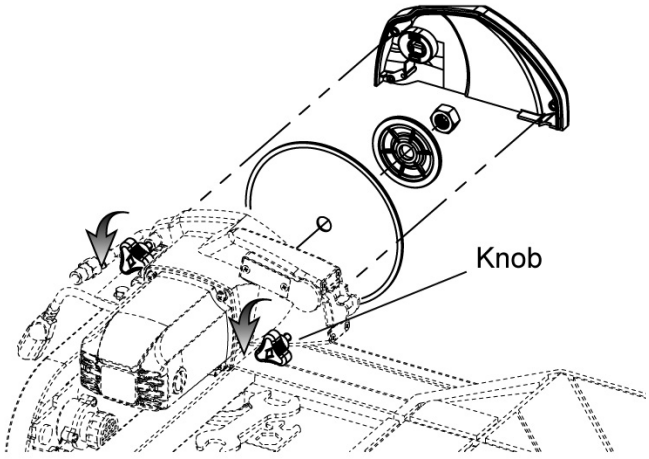

Figure 1

2. Pull the outer blade guard away from the inner blade guard, away from the motor.
3. Remove the blade shaft nut and outer fl ange. If a blade has been mounted, hold the blade with one hand and use the other hand to loosen the nut with the included wrench. Remove existing blade.
4. Mount new blade, but make certain the arrow on the blade coincides with the rotation direction of the shaft.
5. Note if while loosening or tightening the blade the nut turns independently from the blade, the other included wrench must be used. Find the slot located behind the inner flange on the blade shaft. Use second wrench to hold blade/shaft in place and remove the nut.

⚠ WARNING: Only use 7" blades on this saw. Setting a smaller blade may cause the blade to grab the material being cut, possibly causing injury to the operator and the saw.

WATER PUMP INSTALLATION

1. Remove the water pump from the box and check that it is not damaged.
2. Place the pump within the water tray such that the water outlet is horizontal. (see figure 2)
3. Connect the water hose from the blade guard to the pump and plug the pump's power cord into the receptacle on the switch box.
4. Fill the water tray so that the water intake is fully immersed. Proper water level must be maintained at all times during saw operation.

⚠ WARNING: Disconnect the pump before attempting to handle the pump. Never operate pump without water in the tray.

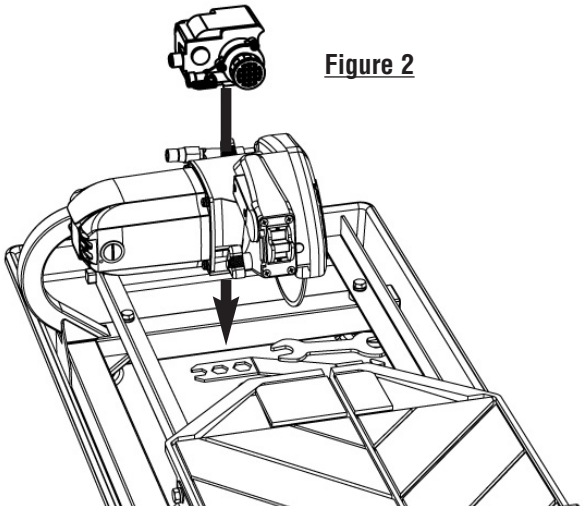

Figure 2

USING THE CUTTING TABLE

1. The ruler guide is made of a thick rigid steel to promote accurate straight cuts. (See figure 3)
2. With the tables broad surface area able, the cast aluminum table spans an area of 14-in x 15-in, able to support up to 20-in tiles.
3. Cutting table is covered by a rubber mat that provides a firm, durable work surface.
4. A rip guide should be used together with the cutting table to ensure precision while making cuts.

Figure 3

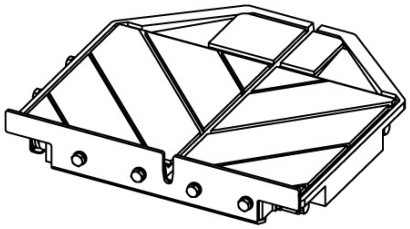

USING THE RIP GUIDE

1. Set the rip guide at the desired location on the ruler guide and tighten the threaded knob. Make sure that the rip guide is firmly tightened to avoid slippage. The rip guide can be used for 45˚ and 90˚ cuts. (See figure 4).
2. After the rip guide is positioned for the desired cut, place material flat against the rip guide and the ruler guide.
3. Now you are ready to make your cut.

PERFORMING DIAGONAL CUTS

1. Remove threaded knob from the end of the rip guide with the horizontal groove and insert it into the other end with the diagonal groove. (See figure 5).
2. Set the rip guide onto the ruler guide, such that the top edge of the rip guide is aligned with the diagonal groove to the left of the vertical channel in the cutting table. Tighten threaded knob once in place.
3. Place one corner of the material being cut in the vertical slot of the ruler guide and rest the adjoining edge flat against the rip guide.
4. Now you are ready to make your cut.

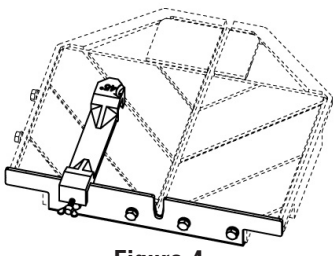

Figure 4

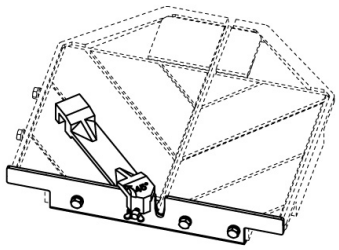

Figure 5

PERFORMING MITER CUTS

To make miter cuts, an optional miter block must be purchased.

1. Place the lip of the miter block on the ruler guide with the threaded knob facing you.
2. Position the miter block such that a tile laying flat against the block may rest its left-most edge within the vertical channel of the cutting table. Tighten the threaded knob to secure the miter block in place.
3. Place material onto miter block and you are ready to cut.

SETTING THE CUTTING DEPTH

The recommended cutting depth is ¼" below the cutting table surface. To adjust the cutting depth, loosen the cutting depth control knob and set the cutting head such that the lowest point of the blade is ¼" below the table surface.

BLADE DIAMETER	CUTTING DEPTH
7"	1.7"

⚠ **Setting the blade too low may damage the cutting table and if set too high, the blade may grab the material being cut, possibly causing injury to the operator and the saw.**

CLEANING THE WATER TRAY

1. Lift the saw up from inside the water tray.
2. If not able to drain the water tray. With the assistance of another, move the water tray to the proper disposal site and pour the waste water away.
3. Wash away any residue waste still attached to the water tray.
4. Place the saw back into the water tray.
5. Reinsert the water drain plug.

TRANSPORTING THE SAW

1. Ensure that the water tray is empty and dry.
2. Unplug the power cord and store it in the water tray.
3. Secure the cutting table to the front of the saw using the table retention device.
4. Tighten all adjustment handles, in particular the handles that set the cutting depth and maximum cutting length.

vii. PROPER BLADE USE

WET CUT BLADES

DO'S

- Inspect blades daily for cracks or uneven wear.
- Always use appropriate blade for material being cut.
- Inspect arbor shaft for uneven wear before mounting blade.
- Always use blades with the correct arbor shaft size.
- Ensure that blade is mounted in the correct direction.
- Use proper safety equipment when operating the saw.
- Always have a continuous flow of water on both sides of blade.
- Secure the blade to the arbor with a wrench.

DONT'S

- Do not operate the saw without safety guards in position.
- Do not operate the saw with blades larger or smaller than 7".
- Do not cut dry with blades marked "Use Wet".
- Do not exceed manufacturer's recommended maximum RPM.
- Do not force blade into material. Let blade cut at its own speed.

DRY CUT BLADES

DO'S

- In addition to the following, always follow wet recommendations.
- Use appropriate blade for material being cut.
- Inspect segment blades for segment cracking or loss.
- Do not use damaged blades.
- Use proper safety equipment when operating the saw.

DONT'S

- In addition to the following, always follow wet recommendations.
- Do not make long cuts with dry blades. Allow them to air cool.
- Do not use the edge or side of blade to cut or grind.
- Do not attempt to cut a radius or curve.
- Do not cut too deep or too fast into the material.
- Do not cut any material not recommended by blade manufacturer.

viii. SAFE OPERATING PRACTICES FOR TILE SAW

WARNING! ***For your own safety and the safety of others do not attempt to operate this saw until you have read and understand the general safety rules for all power tools and the following additional safety precaution unique to this saw.***

1. Use safety equipment - wear safety approved hearing, eye, head and respirator protection.

WARNING! ***The dust generated by cutting of tile, marble, stone, bricks etc. can be injurious to your health. Always operate machinery in well ventilated areas and provide proper dust removal. Always wear a dust mask approved for respiratory protection against these types of dusts and mists.***

2. Read and understand the symbol definitions contained in this manual.
3. Read and understand all warnings and instructions on the machine.
4. Read all safety materials and instructions that accompany any blade or accessory used with this machine.
5. Establish a training program for all operations of this machine.
6. Always provide a copy of this manual to the equipment user. If you need extra copies call our Customer Service Department at **1-800-969-5561.**
7. Always select a diamond blade according to the manufacturers recommendation suitable for the material to be cut. Never use a blade having a maximum operating speed lower than the "No load R.P.M." marked on the tool nameplate. Do not operate any saw without safety guards in place or with a blade diameter larger than the maximum saw blade capacity.

8. Before mounting a blade on the saw clean and inspect the arbor shaft, blade flanges and the diamond blade for uneven wear or damage. If it appears to be damaged, ***Do not operate the tool.*** Have it serviced by a qualified service technician.

9. Before each use of the saw, inspect the diamond blade for hairline fatigue cracks. If such a crack or flaw is evident, discard the blade. ***Using a damaged blade may cause injury to the operator or others.***
10. Be sure that the blade arbor hole matches the blade adapter flange supplied with the saw. Use only blade adapter flanges that came on your saw. Never use damaged or worn blade adapter flanges.

11. ***Installing the blade,*** install the blade with the arrow pointing the same direction as the rotation of the arbor shaft or the arrow on the blade guard. Be sure to tighten the blade shaft arbor nut with the wrench provided. ***Be careful not to over tighten.***

WARNING! ***Not dressing the blade frequently or setting the blade too high will cause it to grab the tile possibly causing injury to the operator and the saw. Setting the blade depth too low will cause it to cut into the main table that may result in injury.***

12. Check that the blade tracks near the center of the channel in the main table, and that the table moves freely from front to back.
13. Sometimes the material being cut is not abrasive enough to expose new diamonds on the blade. If the blade is not sharpened, it will rub against the surface resulting in heat build up in the core. To prevent this, it is necessary to dress the blade. To dress the blade simply cut something that is very abrasive such as a piece of cement block. Indications that the blade needs dressing includes:
    - The diamond in the matrix appear shiny because they are worn flat.
    - The blade stops cutting or noticeably slows down.

Blade dressing stones are available from your local Pearl Warehouse.

14. Before using the saw fill the water tub enough to submerge the water pump with clean water only. Replenish as necessary and clean the water tub frequently. Do not operate a wet cutting blade without adequate water flow to both sides of the blade. Never run the pump dry.
15. When cutting, always hold the material firmly lying flat, supported by the main table with one edge resting against the main table backstop.

- Do not attempt to cut pieces too small to safely hold down on the main table.
- Never use the side of the blade to cut or grind with, only cut in a straight line.
- Keep all parts of your body away from the blade and all other moving parts.
- Never touch or try to stop a moving blade with your hand.

16. When cutting dry - always unplug the water pump first. ***Never run the pump dry.***
    - Do not use a wet cutting blade for dry cutting. Select the proper dry cutting blade for your application.
    - Never make long continuous cuts with dry cutting blades. To avoid heat build up, allow the blade to cool, remove the tile and allow the blade to run freely for a few minutes.

IMPORTANT - If there is any tendency for the saw to tip or move during certain operations, such as when cutting large heavy tile; the saw must be securely fastened to a supporting table.

17. Make certain all adjusting knobs or locks are tight and engaged in their detents and that movable parts not intended to move during operation are securely locked before making a cut. ***Be careful not to over tighten.***
18. Before connecting the machine to a power source check to see that the "On/Off" switch is in the "off" position.
    - Make sure the blade is not contacting anything before connecting to a power source and starting the motor.
    - Know how to stop the machine quickly in case of an emergency.
19. Grounding Instructions
    - In the event of a malfunction or breakdown, grounding provides a path of least resistance for electric current to reduce the risk of electric shock. This tool is equipped with an electric cord having an equipment-grounding conductor and a grounding plug. The plug must be plugged into a matching outlet that is properly installed and grounded in accordance with all local codes and ordinances.
    - Do not modify the plug provided - if it will not fit the outlet, have the proper outlet installed by a qualified electrician.
    - Improper connection of the equipment-grounding conductor can result in a risk of electric shock.
    - Check with a qualified electrician or service personnel if the grounding instructions are not completely understood, or if in doubt as to whether the tool is properly grounded.
    - Use only 3 wire extension cords that have 3 prong grounding plugs and 3 pole receptacles that accept the tool's plug.

Repair or replace damaged or worn cord immediately.

This tool is intended for use on a circuit that has an outlet that looks like the one illustrated in *Figure 6*. The tool has a grounding plug that looks like the plug illustrated in *Figure 6(A)*. A temporary adapter, which looks like the adapter illustrated in *Figure 6(B)* and *6(C)*, may be used to connect this plug to a 2 pole receptacle as shown in *Figure 6(B)* if a properly grounded outlet is not available. The temporary adapter should be used only until a properly grounded outlet can be installed by a qualified electrician. The green-colored rigid ear, lug, and the like, extending from the adapter must be connected to a permanent ground such as a properly grounded outlet box.

NOTE - ***Use of a Temporary Adapter is not permitted in Canada.***

Additionally, water pump requires the use of a Ground Fault Circuit Interrupter. Therefore, when using the water pump receptacle, this tool must be plugged into a properly installed Ground Fault Circuit Interrupter outlet. *See Figure 6(D)*. If a Ground Fault Circuit Interrupter outlet is not available, Pearl Abrasive Co. has it available as an accessory item. A plug-in Ground Fault Circuit Interrupter may be plugged into a properly installed and grounded 3-pole outlet. Refer to *Figure 6(E)*.

20. Position of the Tile Saw
    - To avoid the possibility of the appliance plug or receptacle getting wet, position tile saw to one side of a wall mounted

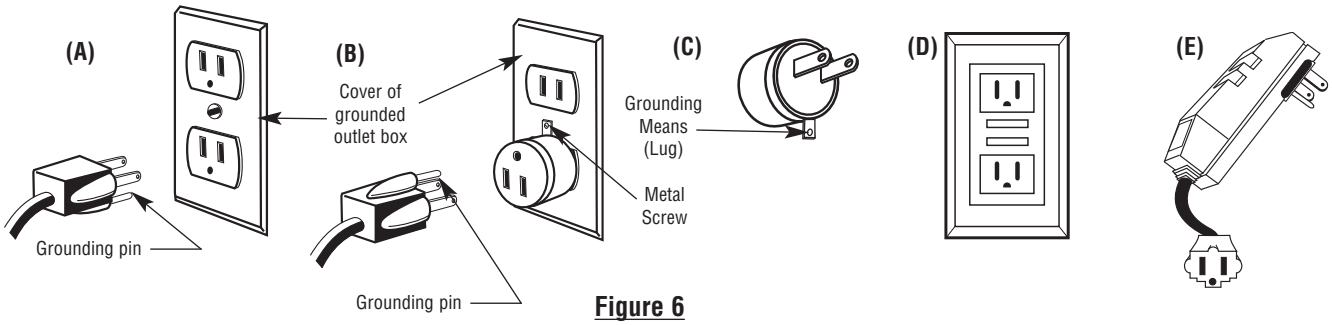

Figure 6
Grounding Methods

receptacle to prevent water from dripping onto the receptacle or plug. The user should arrange a "drip loop" in the cord connecting the saw to a receptacle. The "drip loop" is that part of the cord below the level of the receptacle, or the connector if an extension cord is used, to prevent water traveling along the cord and coming in contact with the receptacle. *See Figure 7.*

- If the plug or receptacle does get wet, ***Do not unplug the cord.*** Disconnect the fuse or circuit breaker that supplies power to the tool. Then unplug and examine for presence of water in the receptacle.

To reduce the risk of electrocution, keep all connections dry and off the ground. Do not touch plug with wet hands.

21. Extension Cords

- Use only extension cords that are intended for outdoor use. These extension cords are identified by a marking *"Acceptable for use with outdoor appliances; store indoors while not in use."* Use only extension cords having an electrical rating not less than the rating of the product. *Refer to chart on page 14.* Do not use damaged extension cords. Examine extension cord before using and replace if damaged. Do not abuse extension cords and do not pull on any cord to disconnect. Keep cord away from heat and sharp edges. ***Always disconnect the extension cord from the receptacle before disconnecting the saw from the extension cord.***

* Ground Fault Circuit Interrupter (GFCI) protection should be provided on the circuit(s) or outlet(s) to be used for the tile saw. Receptacles are available having built-in GFCI protection and may be used for this measure of safety.

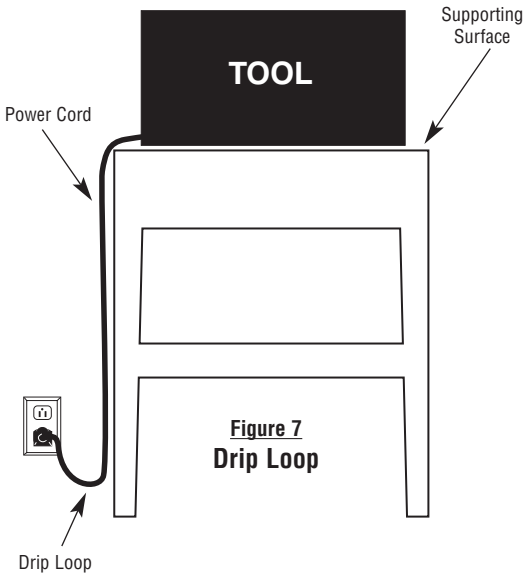

Figure 7
Drip Loop

ix. CARE AND MAINTENANCE

⚠ WARNING! ***For your safety before performing any maintenance on the saw turn off the power switch and unplug the power cord.***

GENERAL RULES

- Always clean the machine before performing any maintenance/ repair.
- Before performing any cleaning/maintenance /repair, the machine must be switched off with the main power switch.

Steps to Follow When Cleaning:

- Please do not use aggressive cleaners (i.e. containing solvents). Do not use high-pressure water jets, aggressive detergents or solutions and liquids with a temperature exceeding 86ºF! Use a fluff-free cloth only.
- Use a cloth which may be lightly moistened only for removing dust and dirt. Hard packed dirt can be removed with a soft brush.
- For the sake of safety, no water/cleaning liquid/vapor may penetrate into the electric motor, connectors/plugs, switches, etc. Therefore cover all apertures, holes in the housing, connectors or plugs, etc. or seal them with adhesive tape!
- Use a soft, low-pressure water jet and a brush to rinse dirt and incrustations away. Be particularly careful when near hazardous parts of the machine (e.g. switch, motor). Clean the motor and switches only by wiping with a moist cloth.
- Do not "rinse" the bearings of the drive elements to prevent them from running dry. The ball bearings of the machine are permanently lubricated.
- After cleaning, remove all covers and adhesive tape! All screws/nuts which you may have loosened must be tightened again!
- After wet cleaning, try the machine on a power outlet which is equipped with a power breaker (i.e. fault current circuit breaker). If the fault current circuit breaker cuts the power supply, the machine must be inspected by an authorized dealer prior to use!

CLEANING

After every use of the machine:

- Remove dirty water from container.
- Remove dirt and mud from the bottom of the container.
- Rinse the immersion pump with fresh water to prevent the water pump from clogging with residual dirt.

After wet cleaning and before using the machine again:

- Connect the machine to an electric power outlet equipped with a "GFCI" safety power breaker. If the safety power breaker cuts off the electrical power supply, do not try to operate the machine but have it checked by an authorized dealer first.

PROLONGED PERIOD OF NON-USE

Before not using the machine for a prolonged period of time:

- Clean and lubricate all movable parts. However, do not grease the guide rails.

After not using the machine for a prolonged period of time:

- Check that the stand is safely fixed.
- Check that all screw joints and nuts are fixed.
- Check that the cutting table is seated properly on the guide rails and that it moves easily along the entire length of the rails.
- With the saw blade removed, switch on the motor for an instant and switch it off again. If the motor does not run, have the machine inspected by a qualified electrician.
- Check that the immersion pump works properly. Turn on the cooling water tap and switch the machine on. If the pump does not give any water or only a little, switch the machine off at once. Clean the pump, or replace if necessary.

EXTREME TEMPERATURE

Ambient temperature below 32° F (Winter):

- To prevent the water in the pump and cooling system from freezing, remove the water after using the machine or when there will be a long break. Make sure that the cooling system is entirely drained so that there is no water left inside the pump and water hose!

WATER PUMP MAINTENANCE

When the machine has not been used for a long period of time, hard packed dirt may begin to build up inside the pump and block the pump wheel. If the machine is activated with the immersion pump blocked, the electric motor of the pump will be damaged within a few minutes! Please follow the steps listed below to clean the pump before operating the saw:

1. Remove the immersion pump from the water container.
2. Clean the immersion pump.
3. Loosen the fixing screws of the pump lid.
4. Take the lid off the pump. Be careful not to damage or lose the gasket underneath.
5. Clean the pump lid.
6. Remove all dirt and incrustations from the pump wheel.
7. Check whether the pump wheel can be easily turned.
8. Then reassemble the immersion pump correctly and check whether it works properly.

CARBON BRUSH REPLACEMENT

1. Unplug the saw before proceeding any further.
2. Locate the carbon brush caps found on the left and right side of the motor housing. Remove the caps (turn counter- clockwise to unscrew) to allow the carbon brushes to spring out. (See figure 8) If they do not come out after the caps are removed, use a flat screw driver to gently nudge them out.
3. When installing the new brushes, make sure they fit snugly into the slots. Do not modify the replacement brushes (i.e. file them down) or use non OEM brushes, as it may damage the armature and in doing so voids the manufacturer warranty.
4. Perform steps 1 through 3 in reverse to reinstall the fan cover.

Figure 8

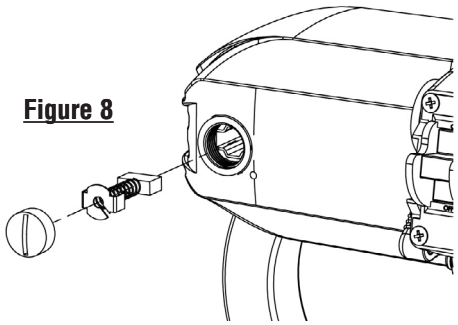

REALIGNMENT

Method 1:

This procedure deals with the most common source of misalignment that occurs when the guide rails are not parallel with the blade.

1. Set the cutting depth such that the blade passes through the table, not over.
2. Place a straight edge (i.e. carpenter's square) on the cutting table as shown in figure 9.

Figure 9

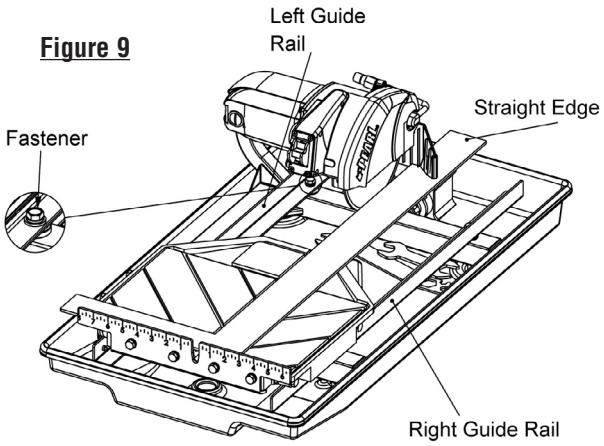

3. Loosen the left and right guide rails by loosening the fasteners found at the ends of the rail. (see figure 9) The left rail should be slightly loose, so there is not too much play during adjustments, but the right rail should move freely as it will be adjusted last.
4. Make sure the short portion of the straight edge is placed flush against the ruler guide. Adjust the left guide rail so that the front and rear edges of the blade touch the straight edge, although a tolerance of 0.1mm between the front and rear edges is allowed. Perform this adjustment along the entire length of the straight edge.
5. Position the table as close to the user as possible. Place the straight edge flush against the ruler guide and blade. Without holding onto the straight edge, gently move the table towards the rear of the saw and then back. Observe any gaps that may appear between the straight edge and blade or between the straight edge and ruler guide. A gap exceeding the allowed tolerance means that the table is not moving parallel to the blade; hence, further adjustments as outlined in step 4 will be required. However, if scenario A or B described below occurs, other adjustments may be required instead.

   A. If the straight edge only touches the blade when the table is positioned midway along the rail or at the ends of the rail, then the rail may be deformed (i.e. bowed). (see figure 10) Perform test cuts to determine if the rail should be replaced. Typically a bowing displacement of about 0.2mm will not affect cutting accuracy.

Figure 10

   B. If the straight edge touches both edges of the blade initially, but shifts apart as the table travels along the rail, proceed to method 2 below.

6. Tighten the fasteners at both ends of the left rail.
7. Adjust the right guide rail so that the horizontal rollers.
8. Tighten the fasteners at both ends of the right rail.

If alignment has been achieved do not proceed to method 2.

Method 2:

This procedure corrects another source of misalignment that occurs when the table's orientation is not parallel with the guide rails.

1. If the table shifts to the right as it travels away from the user, a shim needs to be added to the guide roller furthest from the ruler guide. On the other hand, if the table shifts to the left, a shim needs to be added to the guide roller closest to the ruler guide. Remove the appropriate guide roller to insert a shim between the roller and table, then reattach. (See figure 11). On the severity of the shift, more than one shim may be required.
2. After adding shim(s), mount the table onto the guide rails and realign the table to the blade using method 1. Check to see if any shifting persists. A shift tolerance of 0.2mm is allowed. A shift in excess of that will require further adjustment—repeat step 1.

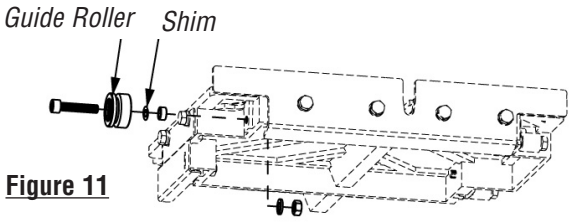

Figure 11

LEVELING ADJUSTMENT

This procedure levels the table so that it is perpendicular to the blade and flush against the rails.

1. Loosen the socket bolts on the flat roller plate so that the roller can swing freely about the bolt. (See figure 12). Do this for both flat roller plates.

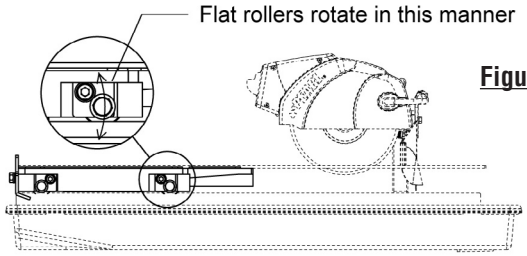

Figure 12

2. Hold the table against the guide rails. The flat rollers should reposition themselves to maintain contact with the guide rails. If the table is not perpendicular to the blade, lift the right side of the table instead to obtain the proper angle. A square tool will be required to confirm the angle. Tighten the socket bolts. Check the table for play. Repeat step 1-2 if some play is still present.

x. ELETRICAL MOTOR SPECIFICATIONS

Horse Power	1 HP
Volts	115 V/ 60hz
Amps	8.5 amps
Motor RPM	6,000 rpm
Cycle	60
Phase	1

⚠ WARNING: To avoid permanent motor damage, you must use the correct extension cord. Never use more than one extension cord at a time. Follow the chart for proper size.

WIRE GAUGE	LENGTH OF CORD
No. 12	25'
No. 10	50'
No. 8	75'

Recommendations:

- It is recommended that a 15 amp circuit be used while operating this saw. This will prevent any loss of power or interruption.
- Always plug saw as close as possible to the power source while operating. This will allow you to receive optimum electricity.

Electrical Wiring Diagram

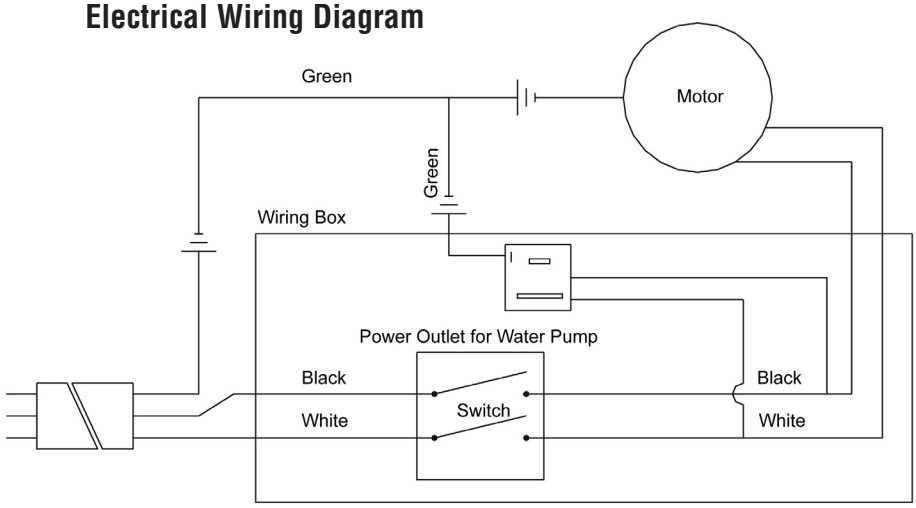

xi. REPLACEMENT PARTS LISTS

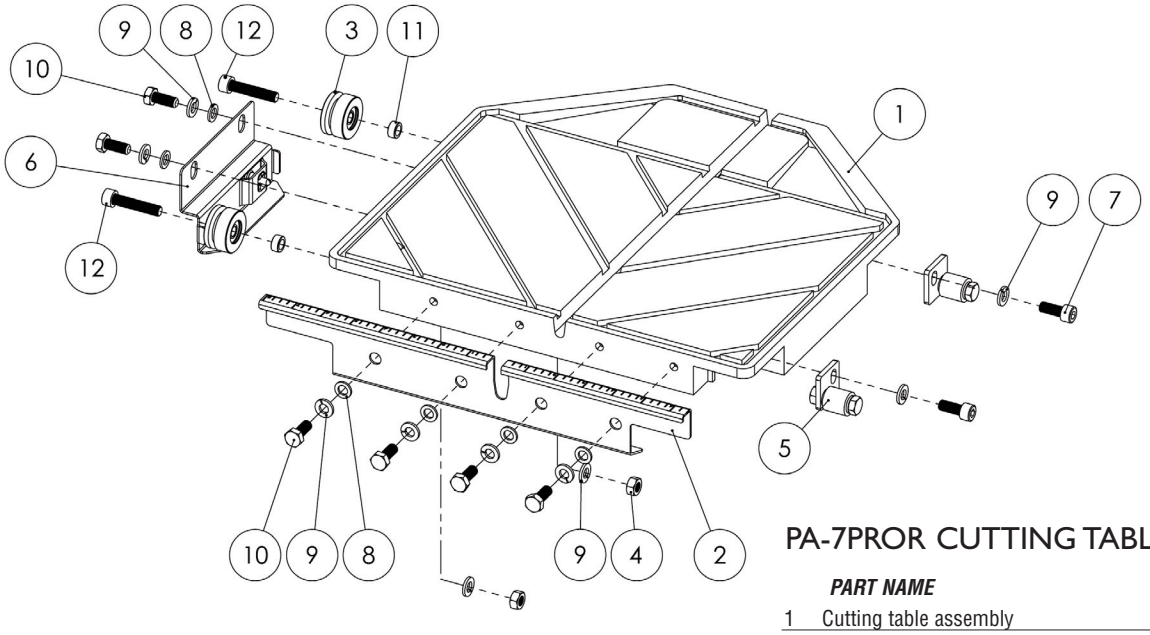

PA-7PROR CUTTING TABLE ASSEMBLY

	PART NAME	PART NUMBER
1	Cutting table assembly	PA00072
2	Cutting fence	PA00002
3	Guide roller assembly (2)	PA00004
4	M 8 x 1.25 Nut	PA00015
5	Teflon flat roller assembly (2)	PA00005
6	Type 3 Table lock Assembly	PA171069
7	M8 x 1.25 x 20L Socket head hex screw	PA00019
8	M8 Narrow washer	PA00016
9	M8 Spring Lock Washer	PA00052
10	M8 x 1.25 x 20L Hex bolt	PA00021
11	D12.7 d8.5 X 6L Spacer	PA00003
12	M8 x 1.25 x 40L Socket head hex screw	PA00012

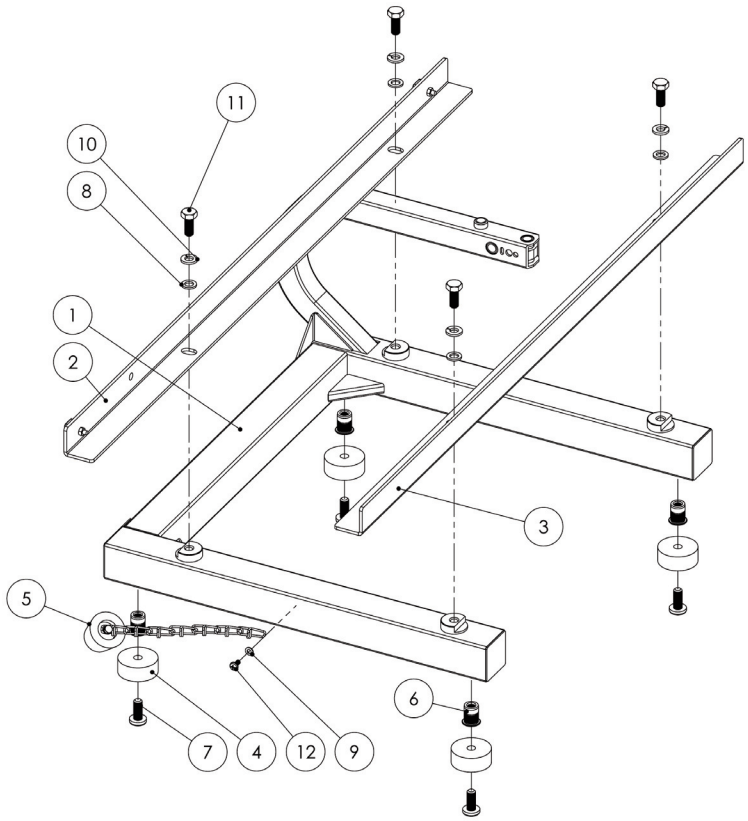

PA-7PROR FRAME ASSEMBLY

	PART NAME	PART NUMBER
1	Primary frame weldment	PA171123
2	Left rail (758L)	PA00068
3	Right rail (758L)	PA00069
4	D37.5*d8*15L Rubber feet assembly (4)	PA00090
5	Water plug assembly	S1000-48
6	M8 x 1.25 Blind rivet nut	PA171081
7	M8 x 1.25 x 20L Cross screw	CX38081
8	M8 Narrow washer	PA00016
9	M4 Narrow washer	CX38044
10	M8 Spring Lock Washer	PA00052
11	M8 x 1.25 x 20L Hex bolt	PA00021
12	M4 x 1.59 x 10L cross tapping screw	PA130037

PA-7PROR MAIN ASSEMBLY

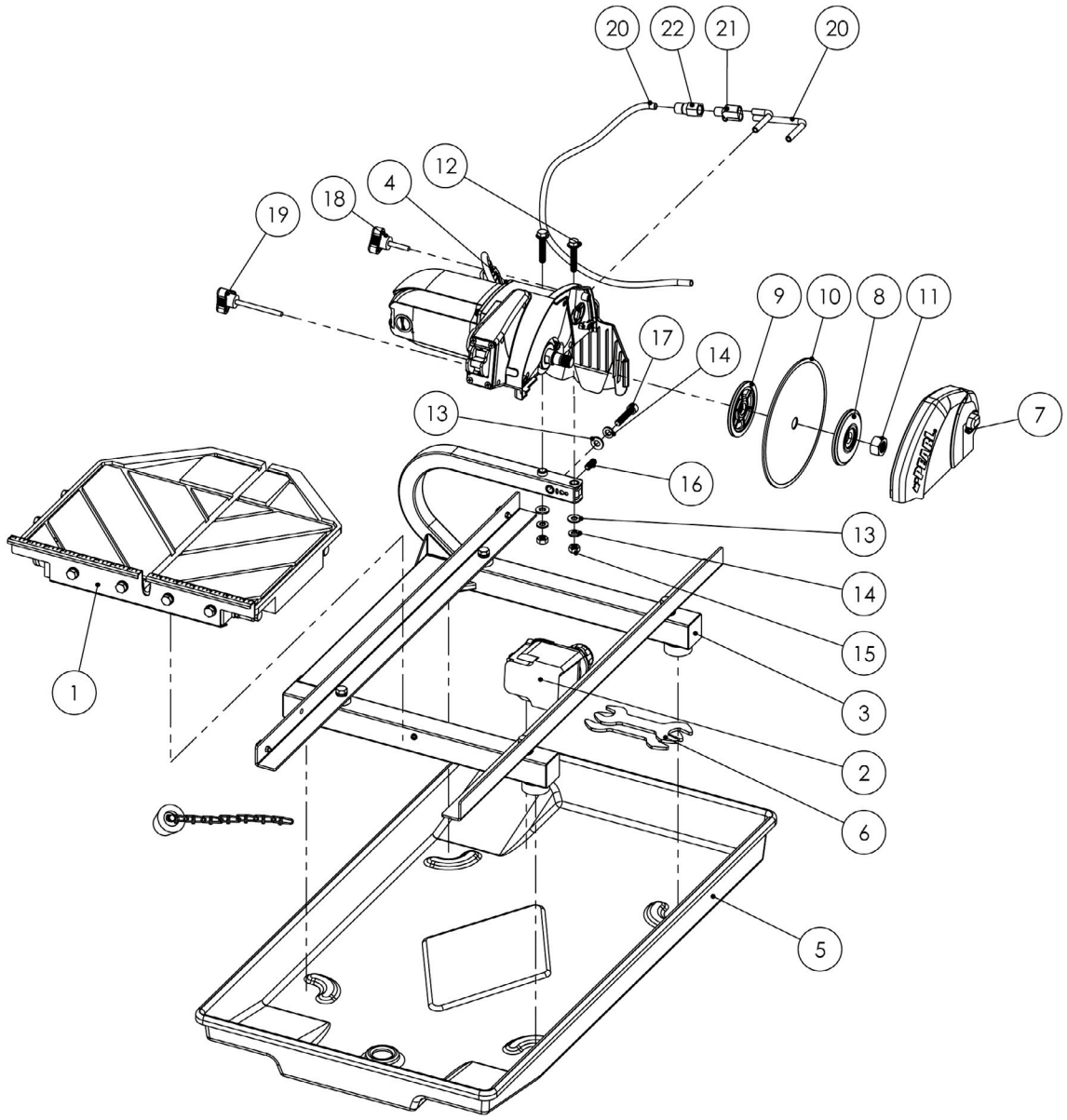

	PART NAME	PART NUMBER
1	Cutting table assembly	PA00072
2	253 gal/hr Water pump	CX38011
3	Frame assembly	PA171122
4	PA7PROR Cutting head	PA171144
5	SUS Water tray assembly	PA00070
6	Wrench 17mm	PA171079
7	Outer blade guard assembly	PA171145
8	Outer flange	PSV10031
9	Inner flange	PSV10031
10	7in. blade	DTL07HPXL
11	5/8 - 11 UNC Nut	PSV00004

	PART NAME	PART NUMBER
12	M8 x 1.25 x 45L Hex Flange bolt	PA171146
13	M8 Wide Washer	PA00016
14	M8 Spring Lock Washer	PA00052
15	M8 x 1.25 Nylon Nut	PA0812502
16	M8 x 1.25 x 20L Flat point set screw	PA25118
17	M8 x 1.25 x 40L Socket head hex screw	PA00012
18	M6 X 1.0 X 30L Knob	PA103790
19	M6 X 1.0 X 70L Knob	PA171127
20	Water Hose (1ft)	PSV00040
21	Y adapter (plastic)	PA171147
22	Female 8D x 1/8" NPT straight fitting	PA171148

PA-7PROR CUTTING HEAD ASSEMBLY

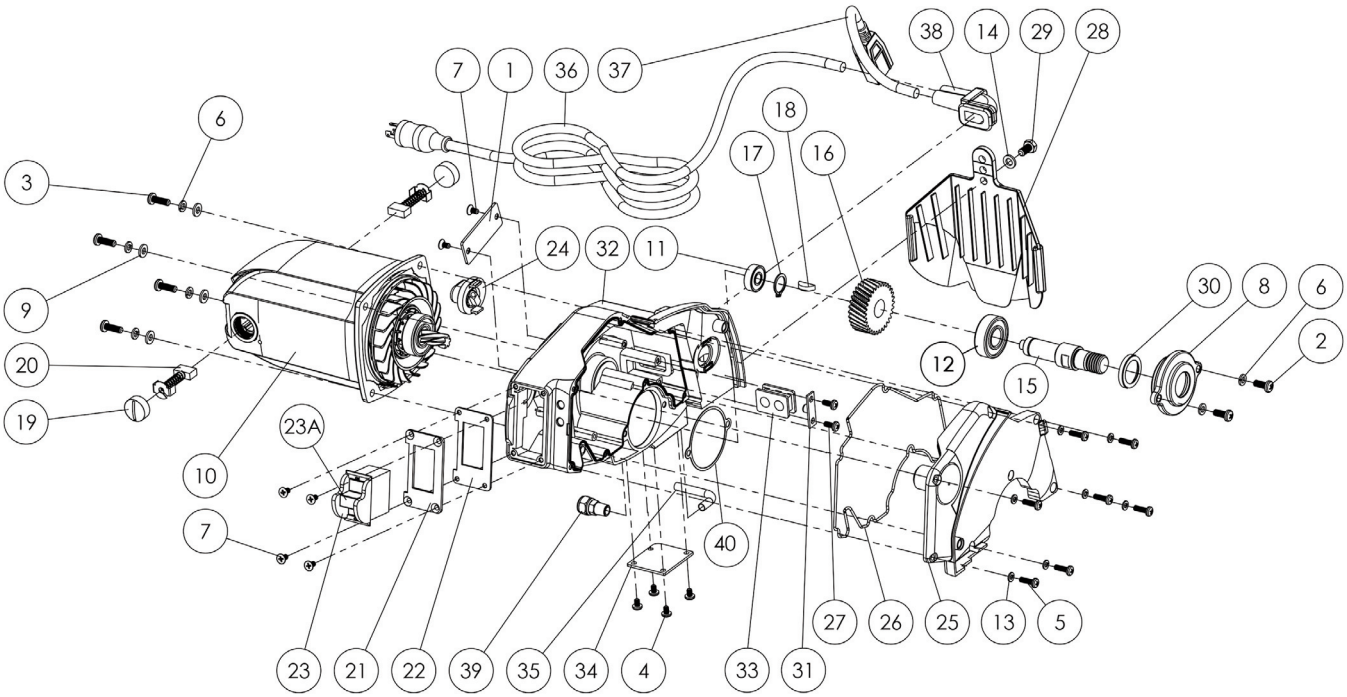

	PART NAME	PART NUMBER
1	Cover plate	PA171091
2	M5 x 0.8 x 12L Cross screw	PA141113
3	M5 x 0.8 x 16L Cross screw	V3925058
4	M4 x 0.7 x 6L Cross screw	PA103788
5	M4 x 0.7 x 14L Cross screw	PA103793
6	M5 Spring Lock Washer	V3925053
7	M4 x 0.7 x 8L Countersunk cross screw	PA141127
8	Gear cover	PA00027
9	M5 Wide Washer	V3925054
10	Motor replacement kit	PA171094
10.2	Armature with Inner & Outer Bearing	PA171097
10.3	Baffle	PA171098
11	D22 d8 Radial bearing 608 ZZ	CX380055
12	D35 d15 Radial bearing 6202 ZZ	V390035
13	M4 Narrow washer	CX38044
14	M6 Narrow washer	PA00082
15	Blade shaft	PA171099
16	Blade shaft gear	PA171100
17	M15 External C-clip	PA00044
18	5 x 16 Woodruff key	V390033.1
19	Carbon brush cap	V390050
20	17mm X 7mm Carbon brush (2)	V390051

	PART NAME	PART NUMBER
21	Power switch plate	PA171102
22	Rubber gasket	CX38087
23	20A 125V/12A 250V On/Off switch	CX38085
23A	On/Off switch Lock Key	PA171034.1
24	Multi directional quick attach fitting	PA171088
25	Cutting head casting cover	PA171160
26	Rubber strip D 1.58	PA171161
27	Motor Retaining Plate	PA171105
28	Rubber splash guard	PSV100023
29	M6 x 1.0 x 12L Hex bolt	PA061001207
30	D28 d20mm Oil seal	PA00033
31	Grommet clamp	PA171111
32	PA7Pro Cutting head casting assembly	PA171162
33	2 Cable D9 cable boot	PA171118
34	Water reservoir cover	PA171163
35	D6.4mm (12 x 30) 90 degree elbow pipe	PA171164
36	Power Cable with Twist lock	PSV10014R
37	3Cx16AWG-29cmL 5-15R Cable	PA171031
38	2 x 16AWG-14AWG Cable elbow grommet	PA171117
39	1/4" Tube male X 1/8" PT male straight comp. fitting	PSV00710
40	Gasket, gear cover	PA171169

PA-7PROR BLADE GUARD ASSEMBLY

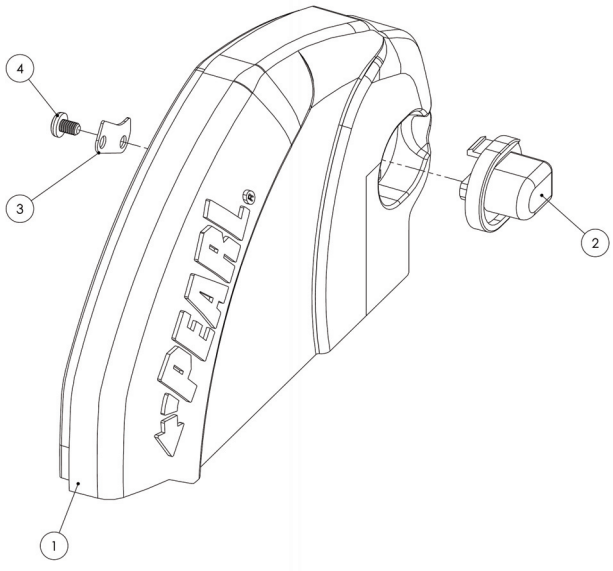

	PART NAME	PART NUMBER
1	PA7PRO Outer blade guard assembly	PA171145
2	Multi-directional water fitting	PA171088
3	Water deflector	PA171089
4	M4 x 0.7 x 6L Cross screw	PA103788

xii. TROUBLESHOOTING

⚠ WARNING! ***For your safety and the safety of others, turn the power switch off and always remove the plug from power source before troubleshooting. Repairs performed by unauthorized personnel could cause serious hazard. We recommend that service to this tool be performed by a qualified service technician with original equipment replacement parts.***

EXCESSIVE NOISE. Possible blade shaft bearing wear, motor belt loose or motor fan rubbing on housing. Have tool serviced.

BLADE WILL NOT CUT. Check for worn out diamond edge. Be sure that the arrow on the blade is rotating the same direction as the motor arbor and/or arrow on the blade guard. Make sure the blade is suitable for the material to be cut. If blade has been used to cut a material that is hard, it may have become dull, dress the blade by cutting a light weight abrasive building block to expose fresh diamonds. Blade dressing stones are available from your local Pearl Warehouse.

MOTOR WILL NOT START. Check power supply. If the water pump turns on when the power switch is in the "on" position, but the motor does not, have the motor serviced.

MOTOR WILL NOT STOP. The contacts in the switch may have become arched together in the on position, have it serviced.

MOTOR SHUTS OFF DURING OPERATION. Check to see that the circuit you are using is not overloaded with lights or other equipment. The fuse or circuit breaker may not have sufficient capacity, use 20-amp power. If you are using an extension cord check the extension cord table to be sure it is heavy enough to carry the current this product will draw. *See Page 14* for electric cord reference.

EXCESSIVE VIBRATION Check to see that the blade is mounted properly according to safe operating practices section. Blade may be out of balance, try a different blade. Arbor shaft bearings possibly worn, have tool serviced.

NOT CUTTING SQUARE. Check the main table and carriage adjustment as well as the blade alignment procedure located in the care and maintenance section.

MAIN TABLE DOES NOT MOVE FREELY. Inspect the guide rails and rollers for build up of tile chips or dry slurry deposits. Clean and check guide roll or adjustments, according to the procedure in the care and maintenance section.

NO WATER FLOW TO BLADE. Check the water feed tube for kinks or obstructions. Check the inlet screen to ensure it is not clogged. Remove the pump inlet and turn the impeller to ensure it is not damaged or jammed. Clean the impeller if necessary and apply a drop of light oil to the shaft - be sure the impeller spins freely.

POOR MACHINE PERFORMANCE WITH LITTLE POWER. Check cord/extension cable for appropriate length and gage. Check power network for sufficient power and circuit breaker capacity.

CENTER HOLE IN BLADE OVERSIZE OR WORN. Saw blade has slipped on shaft while running. Check shaft for damage and replace blade.

xiii. ACCESSORIES & PARTS

Name (Qty.)
Stainless Steel Water Tray (1)
Drain plug not included
Part Number
PA00072

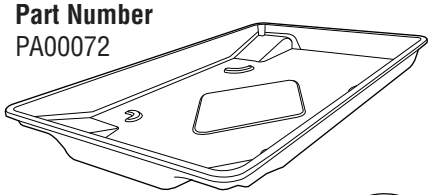

Name (Qty.) Drain Plug (1)
Part Number S1000-48

Name (Qty.)
Optional Universal
Saw Stand (1)
Part Number
V35010-UV

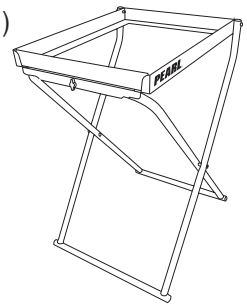

Name (Qty.)
Optional Complete
Miter Block with
Knob (1)
Part Number
S1000-34

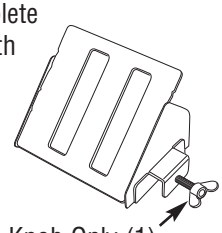

Knob Only (1)
V35016

Name (Qty.)
Complete 45˚/90˚ Rip
Guide with Knob (1)
Part Number
V35000

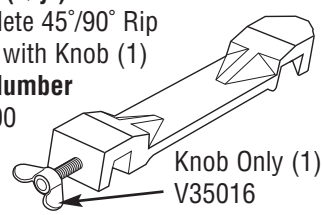

Knob Only (1)
V35016

Name (Qty.)
GFCI (1)
Part Number
V35018-REV

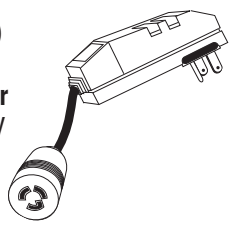

Name (Qty.)
Extension Cord (1)
Part Number
V35019

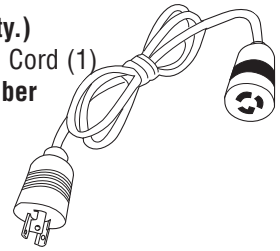

xiv. THE RIGHT BLADE DOES THE RIGHT JOB

For the most effective cutting and blade life always use the recommended Pearl Abrasive Co. blade.

PEARL BLADE SERIES	APPLICATION							
	CERAMIC TILE	EXTRA HARD CERAMIC	PORCELAIN	MARBLE	GRANITE	HARDSTONE	GLASS TILE	MOSAIC METAL TILES
Reactor ADM	⊙	⊙	⊙	⊙	⊙	⊙		⊙
HPXL Series	⊙	⊙	⊙	⊙	⊙	⊙		
HP Series		⊙	⊙		⊙			
Turbo Mesh		⊙	⊙		⊙	⊙		
DTLB19 Series	⊙							
Pro-V Series	⊙	⊙	⊙					
Glass Blade								⊙
SH Series	⊙			⊙				

xv. HOW TO ORDER PARTS

Please have the following information ready before calling:

- Serial Number of your Tile Saw
- Model Number of the Tile Saw
- When purchased and where
- Part Description

All parts listed may be ordered from your Local warehouses. If the part is not stocked locally, call our Corporate office and ask for our Customer Service Department. For Technical Support call **1-800-969-5561**. In Canada call **1-800-387-0008**. There is a $25.00 minimum order.

Return Policy: Return goods for credit or exchange on the basis of the following terms: **(1)** They must be current products; **(2)** Items returned for replacement or refund should be in original cartons and must be accompanied by a packing slip with the following information: Returned Goods Authorization (RGA) number obtainable from Customer Service Department • List of items returned • Reason(s) for return(s) • Copy of original invoice(s); **(3)** Freight charges must be assumed by sender; **(4)** Returning goods are subject to a 15% handling charge to cover our cost of repacking and restocking. All Prices are subject to change without notice.

Disclaimer: Pearl Abrasive Co. reserves the right to make changes or improvements on its products without incurring an additional obligation including any obligation to make corresponding changes or improvements to products previously manufactured or sold. Pearl reserves the right to discontinue products at any time without notice.

All illustrations displayed in this manual are the property of Pearl Abrasive Co. and shall not be duplicated or reproduced without the express written consent of Pearl Abrasive Co.

PEARL LIMITED WARRANTY

Every PEARL ABRASIVE CO. tool is thoroughly inspected and tested before leaving the factory. It is warranted to be free of defects in materials and workmanship for a period of ONE YEAR from the date of original purchase. Pearl will repair or (at our opinion) replace a product, or part thereof, found by PEARL ABRASIVE CO. to be defective, provided the defective product is returned to PEARL ABRASIVE CO., freight pre-paid, with proof of purchase.

RGA NUMBER IS REQUIRED. Prior to the return of any product or part, a Return Goods Authorization number must be obtained from PEARL ABRASIVE CO. by fax (562) 928-3857 or calling (800) 969-5561 . The owner's name, address, phone number, as well as the serial number of the product, proof of purchase, and a brief statement detailing the nature of the claimed defect, are required for authorization.

This Warranty does not apply where:

- repairs have been made or attempted by others
- repairs are required because of normal wear and tear
- the tool has been abused, misused or improperly maintained
- alterations have been made to the tool
- the product is used in a manner or with a blade not recommended by the manufacturer

In no event shall Pearl Abrasive Co. be liable for any indirect, incidental or consequential damages from the sale or use of the equipment. This disclaimer applies both during and after the term of warranty.

Pearl Abrasive Co. disclaims liability for any implied warranties, including implied warranties of "merchantability" and "fitness for a specific purpose", after the one year term of this warranty.

This warranty gives you specific legal rights, and you may also have other rights which vary from state to state. Some states do not allow the exclusion or limitation of incidental or consequential damages, so the above limitation or exclusion may not apply to you. Some states do not allow limitation on how long an implied warranty lasts, so the above limitation may not apply to you.

All parts replaced under warranty will be considered as part of the original product and any warranty on these parts will expire coincidently with the original product warranty.

This warranty supersedes all previous PEARL ABRASIVE product warranties. **EXCLUSION:** Water pump and motor warranty is through the original equipment manufacturer.

PEARL®

CORPORATE OFFICE: SO. CALIFORNIA • USA
4900 ZAMBRANO ST., COMMERCE, CA 90040-0031
562-927-5561 • FAX 562-928-3857
Toll Free: 800-969-5561
www.pearlabrasive.com

GEORGIA • USA
3950 STEVE REYNOLDS BLVD.,
NORCROSS, GEORGIA 30093

ONTARIO • CANADA
375-2 PIDO ROAD
PETERBOROUGH, ONTARIO K9J-6X7

Part No. PA7PRORMAN • 02/19